REV.NO.	DATE/TARIH	NOTES/ACIKLAMALAR
1	04.10.2018	CIZIM OLUSTURULDU
2		
3		

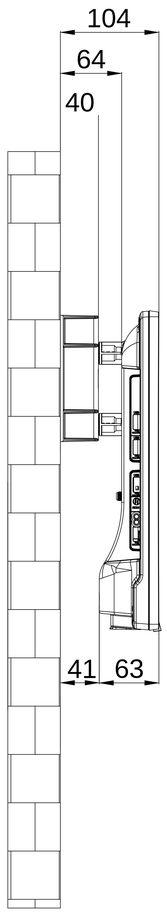

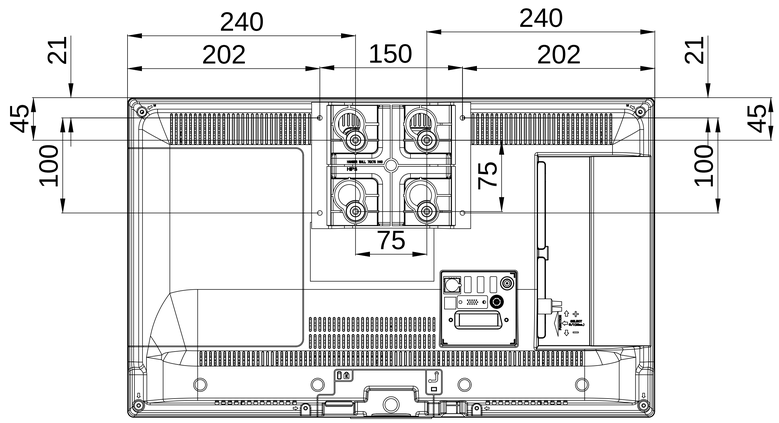

MODEL 24506 DS	DIMENSIONS (mm)		
	WIDTH mm	DEPTH mm	HEIGHT mm
PRODUCT	554	65	337
PACKAGING	700	110	418

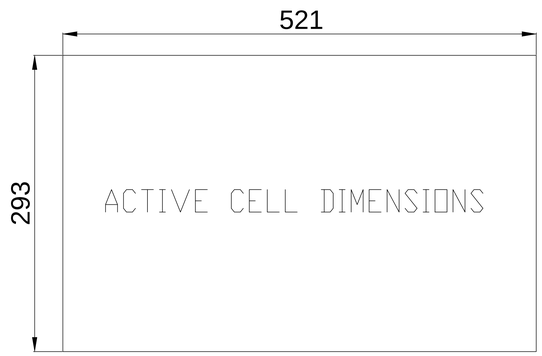

TOLERANCES	K
0.00/50.00	±0.10
50.01/100.00	±0.30
100.01/250.00	±0.50
250.01/500.00	±0.75
500.01/1000.00	±1.00
1000.01/2500.00	±1.50
ANGLES	±0.5°

NAME: 24506 DS HANGER WALL

REV: R01

CREATED : NIHAT öZTEN

DATE: 04.10.2018

LAST REV. : NIHAT öZTEN

SHEET: 1 / 1

CHECK : Hakan KOYUNCUOGLU

SCALE : 1

APPRV. : Deniz ÇETINYUREK

UNIT mm

VESTEL

VESTEL ELECTRONICS / DIJITAL PRODUCTS OPERATIONS MANISA/TURKIYE
TEL:+90.236.2130660 FAX:+90.236.2130512